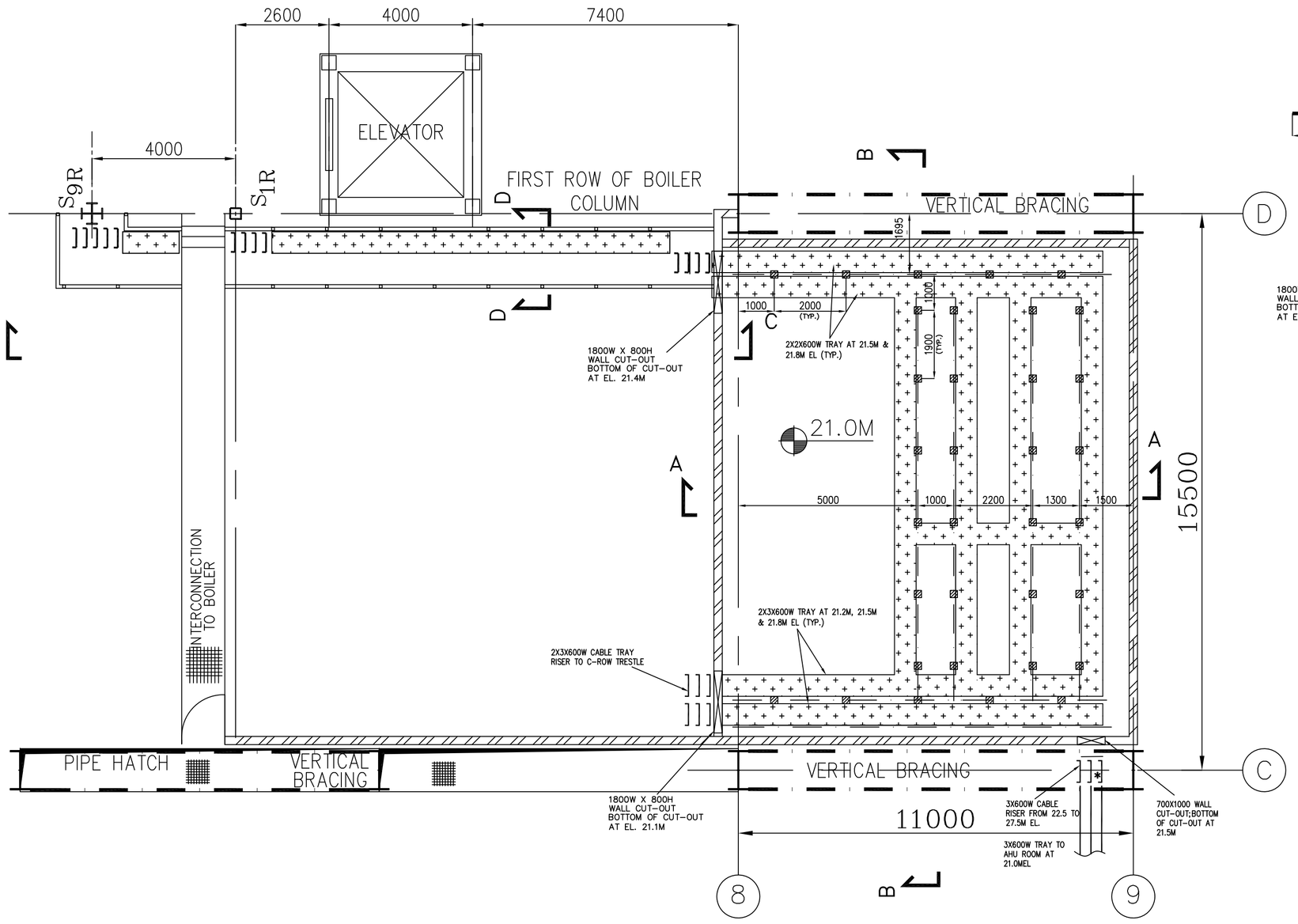

PLAN AT 21.0M EL

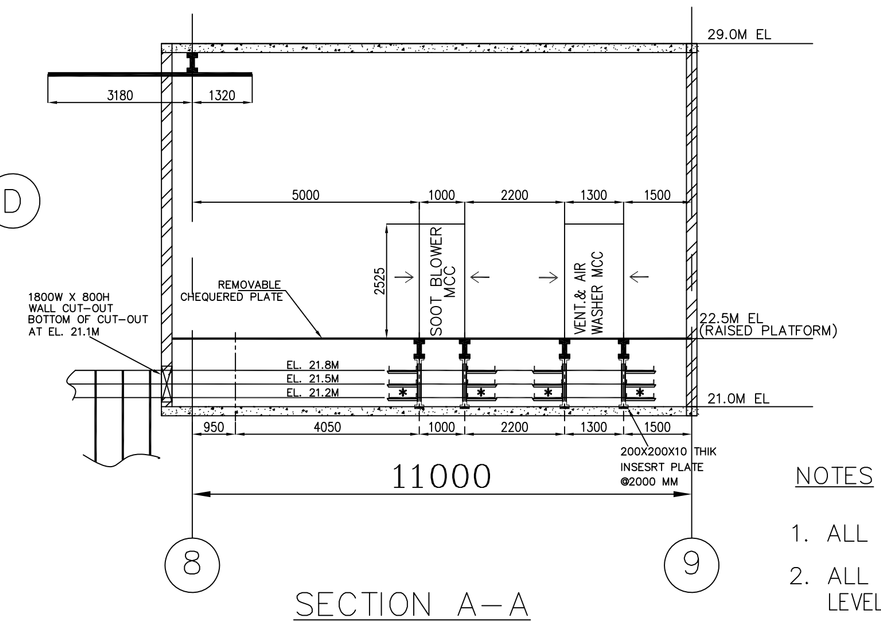

SECTION A–A

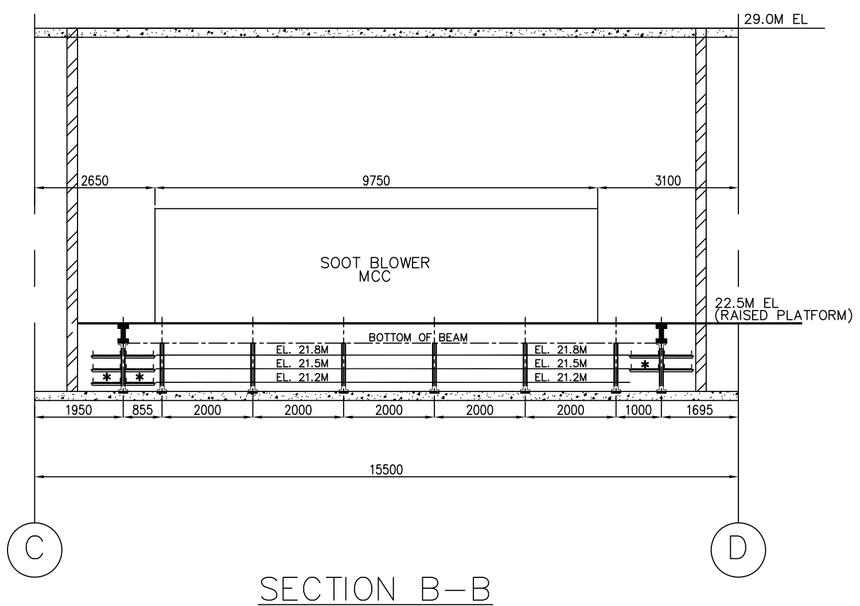

SECTION B–B

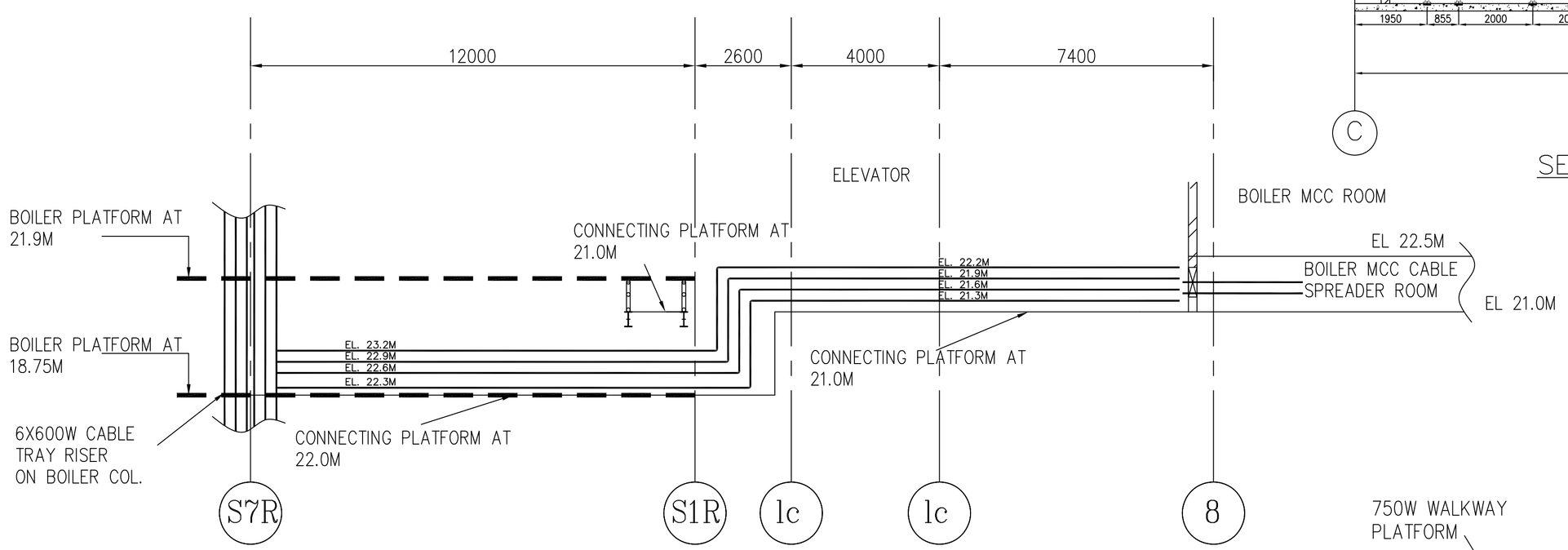

SECTION C–C

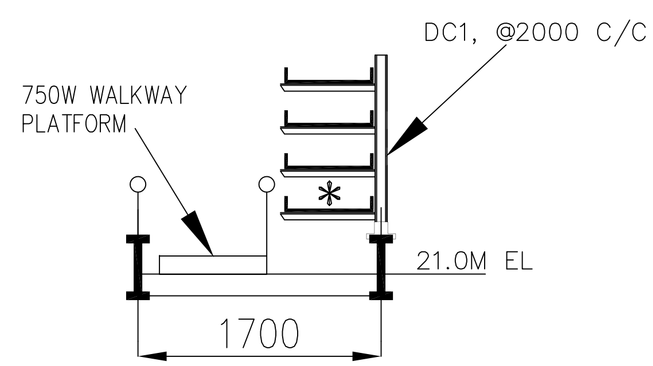

SECTION D–D

LEGENDS

- BRICK WALL
- → OPERATING FRONT OF PANEL
- SINGLE LEAF DOOR, 1000WX2100H
- CABLE TRAY RISER
- * PERFORATED TYPE TRAY

NOTES

1. ALL DIMENSIONS ARE IN MM AND ELEVATIONS IN METRES.
2. ALL ELEVATIONS MARKED ARE W.R.T. TG HALL FINISHED FLOOR LEVEL AS 0.0M WHICH CORRESPONDS TO EL 219.0M.
3. REMOVABLE CHEQUERED PLATE FOR MAN HOLE SHALL BE KEPT IN 21.5M FLOOR FOR CABLE LAYING PURPOSE.
4. TRAYS MARKED AS " " SHELL BE PERFORATED TYPE TRAYS.
5. STANDARD CABLE TRAYS AND ACCESSORIES SHALL BE USED.
6. CABLE ROUTING SECTION DETAILS SHALL BE ADDED IN SUBSEQUENT REVISION WHILE CABLE ROUTING.

REF. DRGS.

TITLE	DRG NO	SOURCE
1. MAIN EQUIPMENT PLANT LAYOUT	PE–DG–427–100–M002	BHEL/PEM
2. T.G EQUIPMENT LAYOUT PLAN AT EL.21.0M	PE–DG–427–100–M005	BHEL/PEM
3. ELECTRICAL SLD FOR AUXILIARY POWER DISTRIBUTION	PE–DG–427–565–E001	BHEL/PEM
4. INSTALLATION DETAILS FOR CABLE TRAY SUPPORT SYSTEM	PE–DG–427–507–E006	BHEL/PEM

REV	DATE	ALTD	CHD	APPD	REV	DATE	ALTD	CHD	APPD

CUSTOMER: NTPCL — NTPC–SAIL POWER COMPANY (P) LIMITED

CUSTOMER'S CONSULTANT: (मेकॉन लिमिटेड) MECON LIMITED

JOB No. 427
STATUS CONTRACT
DISTRIBUTION
TO
No.OFF

ROURKELA PP–II EXPANSION PROJECT (1X250 MW)

BHARAT HEAVY ELECTRICALS LTD
POWER SECTOR
PROJECT ENGINEERING MANAGEMENT
NOIDA

DEPT CODE		NAME	SIGN	DATE
E	DRN	SuM/AnA		02.03.2017
	DESN	SuM/AnA		02.03.2017
	CHD	SBR		02.03.2017
	APPD	SL		02.03.2017

TITLE: CABLING LAYOUT BELOW BOILER MCC ROOM

MPL	C	MSE	I	MAX	E	DEPT. SIGN DATE	SCALE 1:150	DRAWING No. PE–DG–427–100–E013

SHEET 01 OF 01 REV 0

SIZE–A1

COMPUTER FILE NAME:

The information on this document is the property of BHARAT HEAVY ELECTRICALS LIMITED
it must not be used directly or indirectly in any way detrimental to the interest of the company.
COPY RIGHT AND CONFIDENTIAL